STEINTRIKES

Assembly Manual

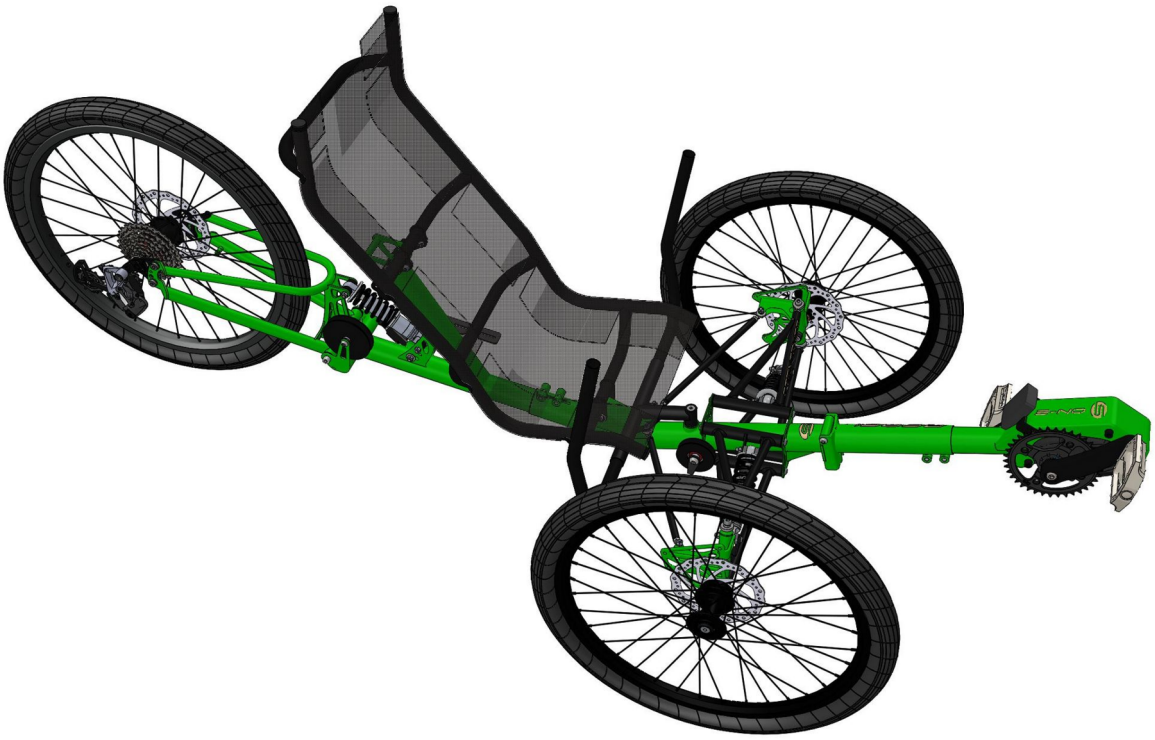

Valid from 2026

INTRODUCTION

Dear Customer,

Congratulations for buying one of the best full suspension recumbent trikes on the market today and welcome to the ever growing family of Steintrikes riders!

Your new trike is the result of more than twenty five years of development and refinement, intensive research and extensive testing under the harshest possible conditions. We rigorously pushed it for years over the limits to test it and be sure that you will enjoy the comfort and stability for many years to come.

The front suspension design has been borrowed from the automotive industry and adapted for use with bicycle components to provide easy and predictable handling under all conditions, providing a comfortable and safe ride to any destination you can imagine.
In this assembly manual, you will find all the information that you need to get your trike set up and ride it wherever you want to go.

This manual covers all the important aspects and steps required to build up and maintain your trike starting from a frame kit up to the trike you will enjoy for many years.

If you bought a completely assembled trike with all the parts, it was already built up and tested by your dealer so you can skip the assembly instructions.

However, we highly recommend reading the whole document as it contains important information about setting the trike up, regular and periodical checks, maintenance and keeping the manual at hand will help you to keep your trike in best condition and reliable.

Recumbent trikes share some parts with regular bicycles, but most of the recumbent trikes are sufficiently different from your two-wheeler and have parts that you might be unfamiliar with. To become familiar with most common terms and names used in this manual use the picture below as a guide.

If you bought the trike as a frame kit, without drivetrain bicycle parts, please take care about compatibility of certain components before purchase of bicycle parts. The bicycle industry doesn't wait for anyone to make changes to their products and you may end end up with a pile of parts that don't work together. In a nutshell, most of the drivetrain components from different manufacturers don't work well or don't work at all with parts made by another bicycle component manufacturer.

Our USER GUIDE describes the wheel size combinations that are tested, work well and if you decide to build your trike up with a different wheel size combination, be aware that changes in frame geometry might change significantly which can render the trike unstable or unreliable. If you are not sure if your idea will work, please contact us and ask before you spend your time and money on parts that will just ruin it for you.

** - Because of constant development and improving details, some of them may differ from those depicted in this manual, and we reserve the right to make changes without prior notice.*

OVERVIEW
(contents)

1. INTRODUCTION
2. OVERVIEW (contents of this manual)
3. MODULAR FRAME CONCEPT
4. COMMON FEATURES
5. MAINFRAME CONFIGURATIONS
6. ASSEMBLY PROCEDURE
(compact and folding -similarities and differences)
6. (UNWRAPPING/UNBOXING)
7. Tools for Bicycle Components
7. TRIKE FRAME PARTS (GET TO KNOW YOUR TRIKE)
8. TRIKE FRAME ASSEMBLY

11. REBEL (*DIFFERENCES)*
14. ASSEMBLY MANUAL (Trike Frame)
28 BICYCLE COMPONENTS
34 TEST RIDE
36 MAINTENANCE
38 WARRANTY

MODULAR FRAME CONCEPT

All our trikes are built around a Modular Concept meaning the trike frame is built up from modules and each module is an independent segment and based on the same basic idea that you can combine several different parts to get the final result, the complete trike which suits you the best for the intended use. Some of the parts, specifically the mainframe, rear end of the frame and the boom must match each other since the Wild One and the Rebel differ from each other in tube diameter used, but both models share some common basic features and options.

The Modular concept was taken from the electronic industry, allowing the user to combine multiple configurations based on the same main unit.

The Modular frameset consists of four main sections:

- The Main frame (front end with front suspension and steering)
- The rear end (seat/rack support)
- Rear suspension/swingarm mount)
- Adjustable Boom:

1. BSA BB with front derailleur post
2. Mid Drive Motor boom for OLI EDGE motors (Bosch Gen4. Compatible)
3. Pinion mounts for cable actuated shifting and Pinion mount for electronic shifting

The main advantages of the Modular frame-set:

- The Modular Main frames allow combining different back ends and conversion from standard rear wheels (135mm wide MTB hubs) to FAT rear wheels (190mm wide hubs)
- Modular frames allow replacement of damaged or broken parts without the need to replace the whole frame.
- Modular frames can be modified/converted from a particular model to a different model/ setup with changing only one or just a few components
- Modular framesets can be broken down for easier transport and/or storage (compact package) and also can be shipped to the dealer or customer at a much lower cost as the volume of the assembled trike is much higher and this can save a great deal of money just on shipping.

COMMON FEATURES

Both Wild One and the Rebel share the same unique proven and innovative front suspension and steering. Unlike many other front suspension solutions like leaf springs, plain coil springs and elastomers, we use real nitrogen-oil filled shocks with spring coils which have dampening and depending on use and rider's weight we can set the front and rear suspension up with the optimal coil for each rider. These shocks also allow the preload to be fine tuned within certain limits, providing softer or harder ride. That means that riders that are short or tall, light or heavy, all can get the trike fine tuned and ideally adjusted for them instead of being limited with a compromise with "up to" and "from" certain weight capacity that the suspension can handle.

Both Wild One and Rebel also share the option to be made as a one compact frame or to have a folding boom (optional) which allows to save space during storage or transport, and unlike complex folding options under the seat or in the middle of the frame which often requires the seat to be removed and several other operations to be executed, our folding frames just fold without any hassle.

Compatibility with different wheel size combinations (within certain limitations), and even two wheel types made primarily for mainly road and narrower tires or off-road wheels and bulky tires. In addition, we have two FAT wheel models as well for riding on surfaces and places where the narrower tires would not be able to negotiate the terrain.

All the rear swingarms are dimensionally compatible in mounting dimensions with both models and have the same 135mm O.L.D. (Overlock Nutlock Distance) except for the Fat rear swingarms which are all 190mm, meaning you can use any rear swingarm (for the matching wheel size and install or replace it without any need to change the frame or rear shock. All the swingarms have a dedicated mounting point for speed sensors and replaceable dropouts (depending on the rear hub axle diameter)

The 20" rear swingarm is available in two versions, an offset version for traditional off-road wheels with cassettes and bulky tires (to allow for sufficient clearance between the wheel with the tire and the chainline) and a symmetrical version for single chainring hubs like Rohloff, Alfine or Enviolo...

Seats come in two types (hardshell in three sizes and a one size steel frame with mesh) and are also completely compatible with mounting points distances and all can be adjusted for the optimal reclining angle

– the only difference is that the seat bracket mounting width on the main frame is different and can't be mixed up (The Wild One has a narrower mounting base than the Rebel)

The Lowrider Modular rear rack is also built to fit to all of our trikes and can be easily assembled on both the Wild One and the Rebel.

That also applies to the top shelf rack that comes in two heights to match smaller (20"-24") or larger diameter wheels (26"-29"). This applies to both standard width and the Fat wheels.

The Assembly Manuals for accessories are separate documents for each specific accessory.

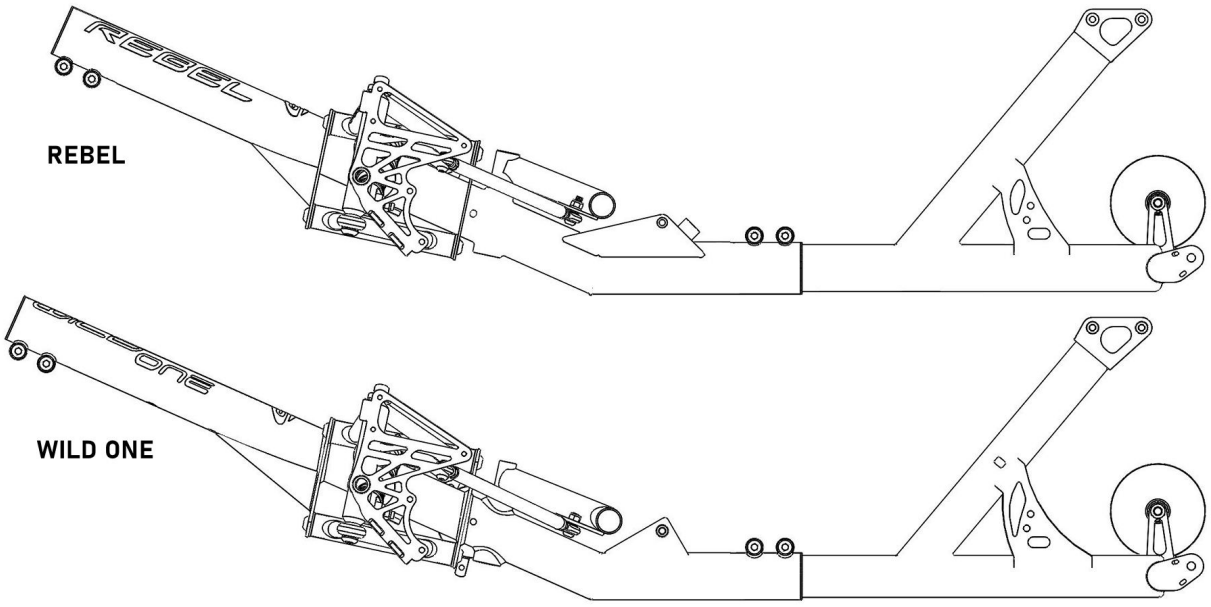

The mainframe can be built as a compact unit, but also can have a folding hinge right in front of the suspension to make the trike shorter and make it easier to transport (fig.2) Once the front end is folded, the wheels protrude and protect the front end, may that be a motor, chainring, and also protects the interior of the car if you carry it somewhere for a ride.

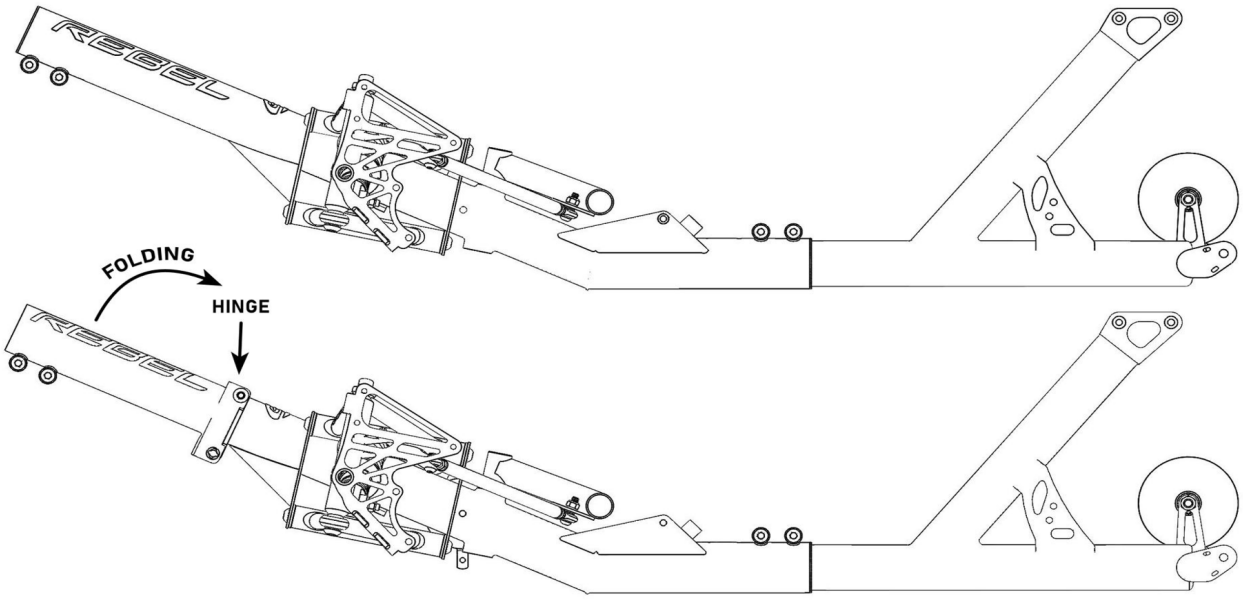

UNWRAPPING/UNBOXING

Each and every Stein trike has been carefully pre-assembled and adjusted to simplify the assembly procedure for the dealers and/or owner as much as possible. Following the provided instructions will result in a perfectly assembled high-end product. If you have the tools and experience, you should be able to do the assembly at home. Or have your local bike shop do the assembly for you.

Poorly assembled trikes will not perform adequately and you will risk damage or premature failure, erratic handling and in worse case, even injuries. Damages, frame or frame part failures caused by bad assembly are not covered by our warranty.

If you received your trike in a cardboard box, open it carefully to avoid damaging the contents. Prepare a sufficient amount of space to take out the parts before removing the protective wrapping. You can do the assembly on a table or on the floor if you don't have a large enough table. Working on a bicycle repair stand is not advisable – those are designed to hold diamond bicycle frames, not trikes.

Take care when cutting cable/zip ties. We recommend using a set of cable cutters for your safety and to avoid damaging your trike.

It is always best to place the trike on a piece of clean cardboard or carpet to avoid scratching the paint. If you have a big enough table or a dedicated stand, it can make the whole assembly procedure much easier and more convenient.
Traditional bike repair stands are not convenient solution for this.

STANDARD TOOLS REQUIRED



Allen Keys
(3mm, 4mm, 5mm, 6mm)
Preferably a set of metric wrenches (8mm, 10mm, 13mm and 17mm)
or an adjustable Wrench/ Spanner



In addition, you should have a clean cloth and disc brake cleaner (degreaser).

Warning!

All the frame assembly hardware (bolts, nuts and washers) on all Stein trikes are denominated in metric sizes. All the bolts, nuts and washers provided are A2 grade water resistant Stainless Steel (not acid resistant). Therefore, it is very important to use only good, undamaged and high quality tools during assembly.

Tools for Bicycle Components

For mounting and adjusting the bicycle components, use only dedicated tools designed for the job.

Worn and damaged tools will damage the recesses and slots on the bolts resulting in inadequate tightening and may cause premature failing or poor performance.

TRIKE FRAME PARTS (GET TO KNOW YOUR TRIKE)

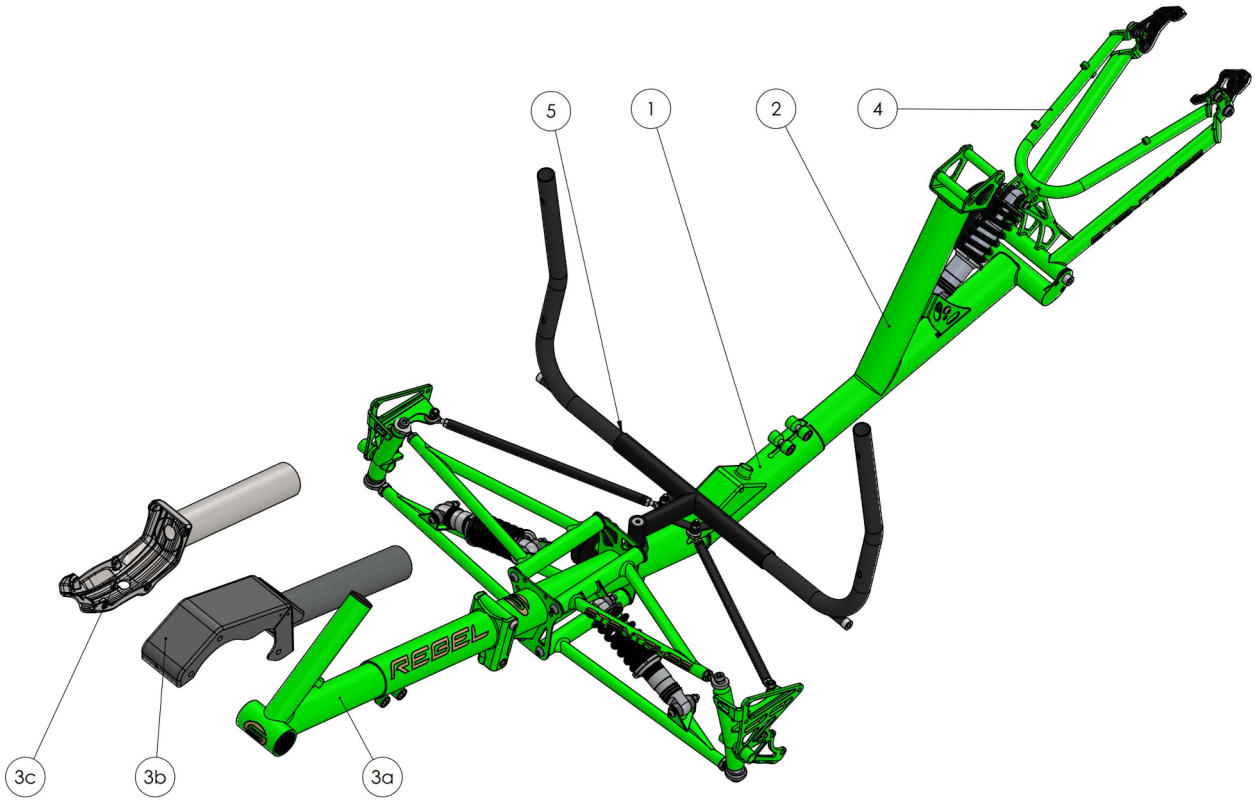

Before the actual assembly process, get familiar with the terms we use for specific parts of the complete frame assembly. That will make it much easier to follow the assembly instructions.
Parts labeled with 1, 2 and 5 are the base to build on.
Parts labeled with 4 depend on the rear wheel size and type
Parts labeled with 3a, 3b and 3c depend on the drivetrain and final configuration.
The configuration is set during the decision making and ordering process. All these options are designed to work flawlessly within the trike design.

1 – Main Frame assembly with suspension and steering
2 – Back End assembly
3a – Adjustable Boom with traditional BSA BB shell
3b – Adjustable Boom for Mid drive motor
3c - Adjustable Boom for Pinion Gearbox
4 – Rear suspended swingarm (20" on this image)
5 – Adjustable Handlebars

Trike Frame Assembly

Set up your workspace:

Make sure that you always have enough space to work during the assembly process. Take care that all the tools and sharp objects are never rubbing against the frame parts to avoid paint damage. Organize the parts in such a way that you can't damage any of the components by stepping on, or dropping it down. Also take precautions not to fall or stumble into anything to avoid getting hurt or injured.

NOTE: All the Stein trikes suspended frames come factory pre-assembled – front suspension and steering components are built up, adjusted and tested before packing and shipping. The back end is also partially pre-assembled to simplify the assembly process.

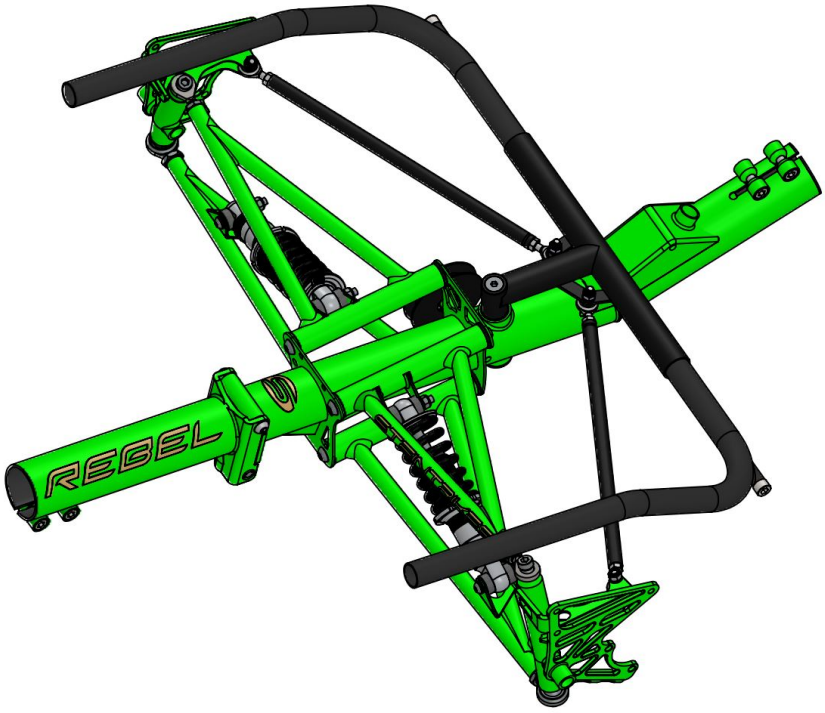

MAINFRAME ASSEMBLY WITH STEERING AND SUSPENSION

The assembly process requires some patience and concentration and even though one person can do this alone, having someone around to give a helping hand can be useful and speed up the process. The tolerances are tight and to insert the rear end (image below) into the Mainframe (image above) there is a simple trick, a simple Aluminum sheet or one or two coins to help you spread the gap and make the inserting much easier.

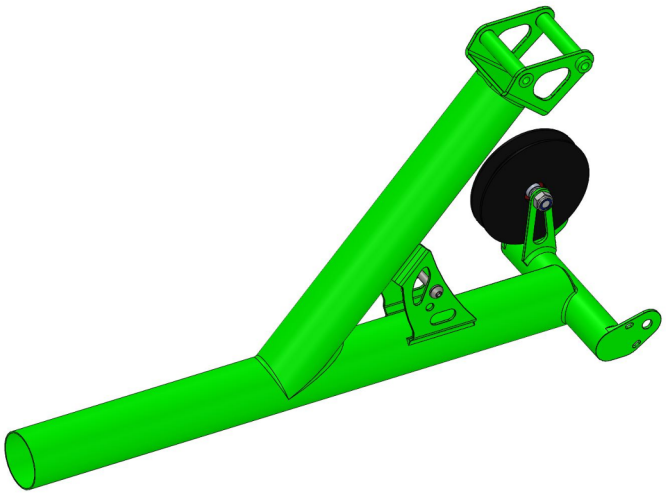

REAR FRAME ASSEMBLY

TECH TIP: Before you start the frame assembly, mount the seat mounting hardware to the hardshell seat.

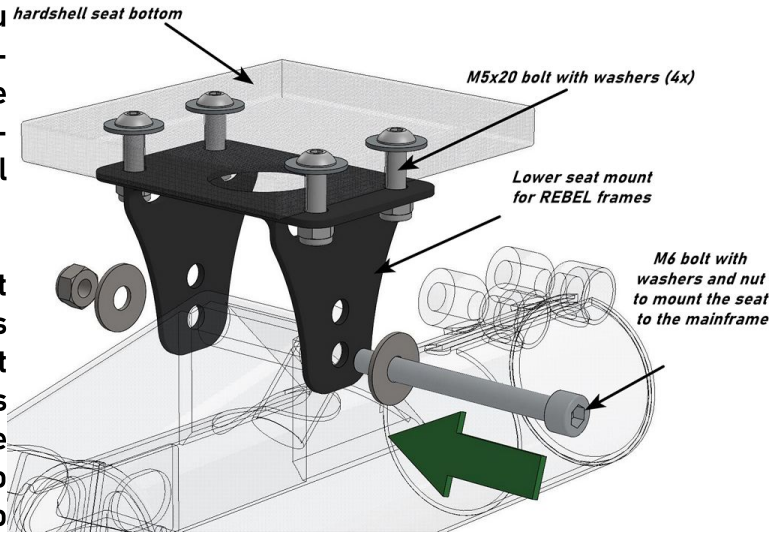

The hardshell seat mounting hardware is included with the seat mounts. The mounts are removed before shipping and it has to be installed prior to mounting the seat to the trike.

The front mount comes with four and the rear with two mounting points. The seats come with holes that correspond with the holes on the mounts.

All six M5 bolts, six big and small washers and nuts should be mounted in the same way, with the button head facing up. (see image)

The front mount has four, the rear two mounting points. Use the 3mm Allen key and the 8mm wrench to tighten. (see image)

The steel frame/Mesh seat has an integrated front mount, only the rear mount should be adjusted in order to align the positioning holes on the seat's mount with the hole on the back end (Figure 2 – pos. 2) of the frame.

1. Secure the main frame :

Place the Main Frame on your working surface in such a way that it can't slide away or fall off (if working on a table) or that you don't step on it (if working on the floor/ground)
The main frame (both Modular and Compact) are factory assembled with front suspension and steering elements installed and adjusted for proper camber and toe-in.

2. Inserting the back end

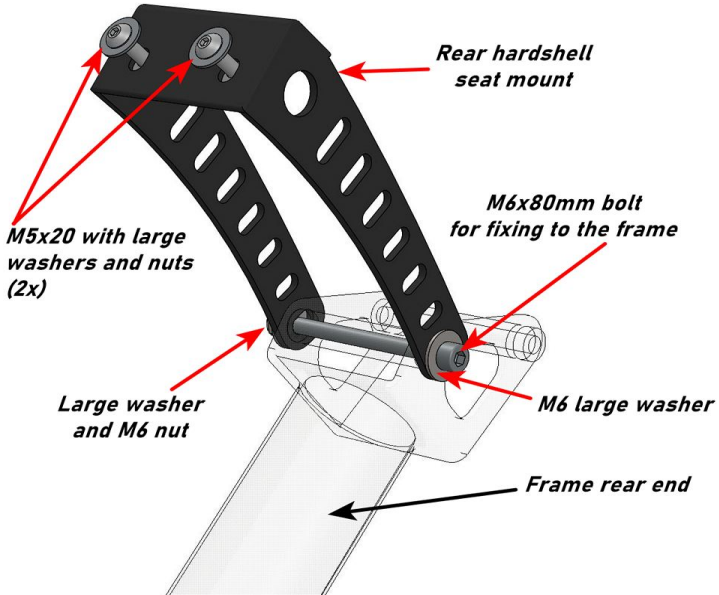

3. Remove the M8x25 bolts with the 6mm Allen key and insert them from the opposite side, turn them clockwise incrementally, insert a pair of coins and slowly push the eyelets apart by turning the bolts clockwise.

IMPORTANT: Take care that the coins does not protrude into the slot on the main frame by holding them in place with one hand while turning the bolts with the other.

When the bolts press against the coins, turn the bolts by approximately 1 ½-2 turns clockwise and check if the back end (Figure 2 – pos. 2) can be inserted. If not, continue by adding ¼ – ½ turn on each bolt each time, until the slot is open enough to insert the back end. Do not turn the bolts multiple times or use excessive force when you feel resistance – pushing the eyelets too far will distort the tube and may cause damage to the frame! The slot should be opened just enough to slide in the back end without using extensive force.

Before inserting the back end, degrease the tube section that will be inserted into the main frame (use brake cleaner).

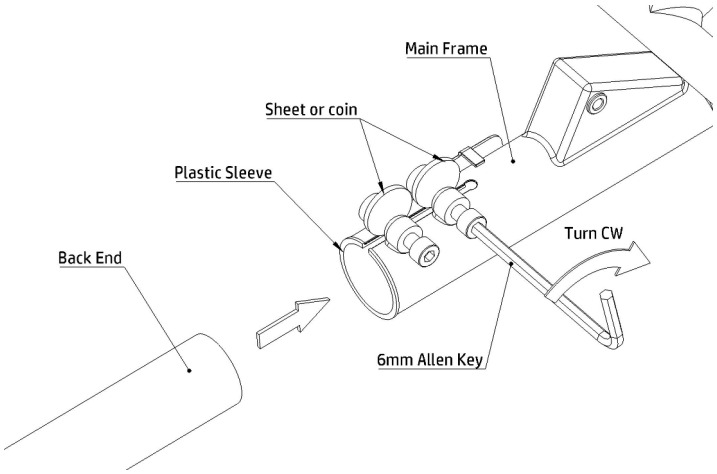

Once the Back End is inserted, push it slowly inward until it fills the slot gap completely (approximately 100mm/~3.9In) and check the distance between the holes for mounting the seat (see image below).

Adjust the position of the back end by moving the back end forward or back. It helps if you rock the back end from left to right and back during insertion.

Remove the M8 bolts from the eyelets and put them back where they were before you started the assembly (left hand side – where the serial number plate is located)
Put the coins/sheet aside, you will need them for installing the boom.

Do not tighten fully yet.

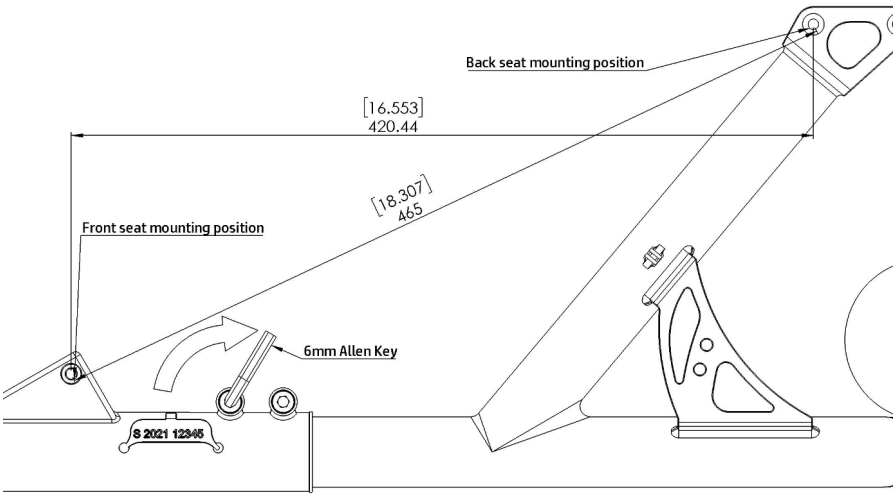

Align the back end as close to vertical as possible (seat and rack mount holes should be horizontally aligned)

The exact distance between seat mount holes should be 465mm/18.3“ and that can be fine tuned with the seat installed.

The rear seat mount is designed to allow for small differences from ideal distance. If the back end is not inserted sufficiently or inserted too far inside, the seat will not fit.

If you followed the instructions, your seat has the mounts already fitted. If not, mount the seat mounting hardware now.

Take the seat, and place/slide the slotted front seat mount to the bolt/QR on the main frame, and when it‘s seated all the way, hold the back end/top of the seat with one hand and lower it toward the back end / rear seat mount which you can move and adjust/align with your other hand. Once the seat is lowered enough, you should be able to see the hole (back seat mounting position) – slightly move the seat from the first to the last slotted hole on the mount, you should be able to push the bolt/QR through any of the holes and the hole on the back end – seat support hole. If not, move the back end in or out accordingly (if you did set the distance correctly, you will have no need to move it any more)

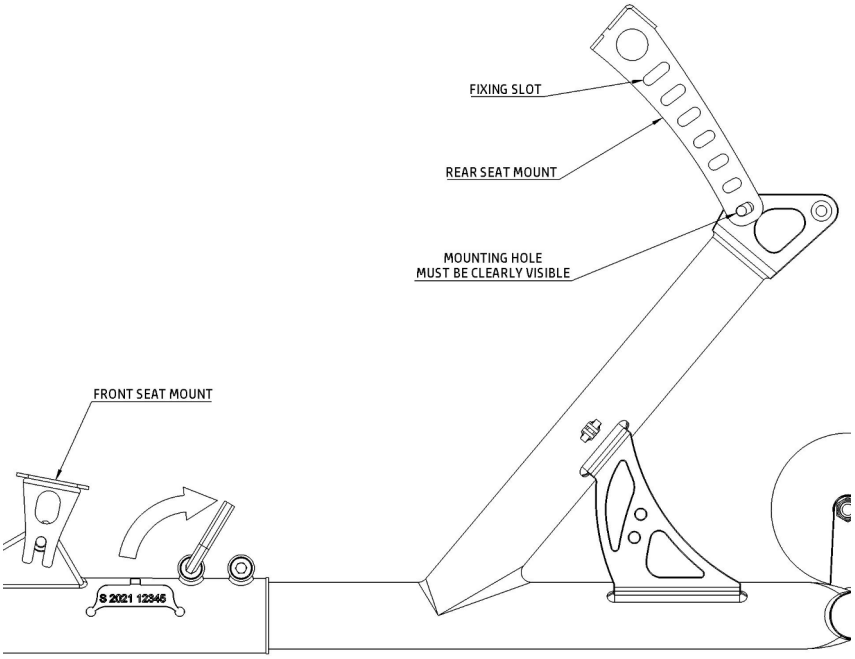

Now that you have adjusted the exact position of the back end relative to the main frame and seat, you can tighten both M8 bolts on the frame joint and remove the seat.

IMPORTANT!

The joint connection must be clean from any grease or dirt before and during assembly. The bolts must be tightened properly to keep the frame from twisting away, especially if the trike comes with a large rear wheel which significantly increases the leverage (torsional forces) on the joint. Only tighten the joint bolts all the way if the frame parts are perfectly aligned.

If not sure, do this with the wheels and seat in place. There is no strictly defined tightening torque value on this position. There are too many variables, stiffness of the tubing, elasticity of the powder coating and plastic sleeve and even ambient temperature.

However, there are guidelines:

- The slot gap must never get closed (over-tight, can cause deformation and eventually defect, cracking of the powder coating or even damaging the frame)

- The rear end should not rotate relative to the main frame (if it can move sideways, it's not tight enough)

As a visual guide, the slot/distance between the eyelets should remain at approximately 2-3mm distance from each other (5/64"-1/8")

WARNING! DO NOT USE CHEMICAL PRODUCTS MADE FOR BICYCLE SEAT POST MOUNTING – THESE MAY CONTAIN ABRASIVES WHICH CAN DAMAGE THE POWDER COATING AND THE PLASTIC SLEEVE REDUCING THE GRIP AND STRENGTH OF THE FRAME JOINT AND RENDER YOUR TRIKE UNUSABLE.

Fit the rear swing-arm and suspension

IMPORTANT :

Before you mount the rear suspension shock (if not installed) note there are two sets of holes on the back end of the frame. The holes on the top are used if the front wheels are 20", regardless of the rear wheel size, and the lower set of holes should be used if the front wheels are 16" or 18". All the three suspension elements (shocks) are 165mm long, measured from centre to centre of the eyelets and can be replaced only with adequate shocks (if upgrading with Air-Shocks).

Currently, only the Wild One Speedster (Narrow Track) uses the lower set of holes. If you fit the suspension element to the wrong position, the trike will still be usable, but it will degrade it's performance in terms of handling.

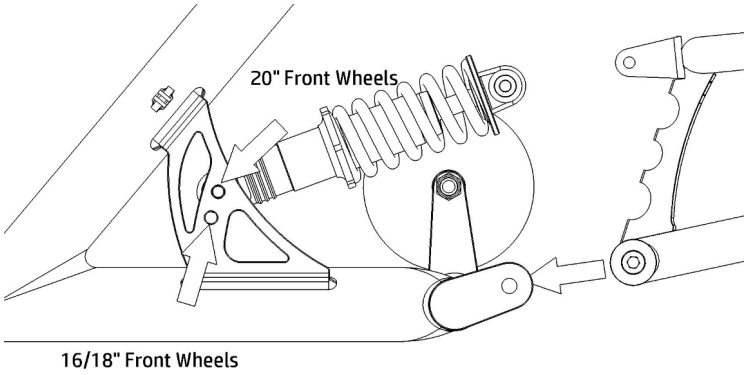

The next assembly step is fitting the rear swingarm. The process is simple and straightforward.

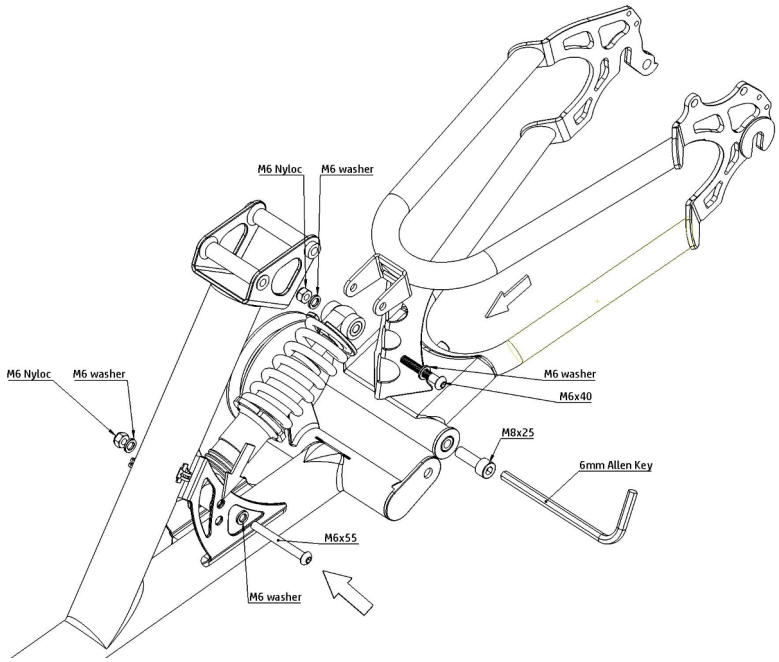

The rear suspension is connected to both the back end and the eyelets on the rear swingarm with 6mm bolts secured with nyloc (self locking) nuts. Use the 4mm Allen key and the 10mm wrench to tighten these.

Even though it is not critical, the best order to do this is to insert the suspension element by pushing the front bolt through the holes on the frame first.

After that slide in the rear swingarm between the eyelets and align one of the holes, insert the M8x25mm bolt by hand and turn clockwise a few turns to hold it in position.

Repeat on the other side.

Once the swingarm is secured from both sides, turn the 8mm bolts all the way and tighten them with the 6mm Allen Key.

Align the hole on the suspension element with the holes on the rear swingarm and push (or turn clockwise) the M6 bolt, and repeat the tightening procedure as you did with the front end of the suspension element.

Now you can check and if needed, tighten the M8 bolts all the way. If you can, use two 6mm Allen keys simultaneously.

Note: If you want to install the luggage rack, the M8x25mm bolts should be pushed though the lower holes on the rack, from both sides, one at the time. This can be a bit fiddly but not complicated. It helps if you fit the provided M6 bolt at the top mount, located right behind the seat mounting point. To avoid confusion, the seat mount is narrower, the rack mount wider.

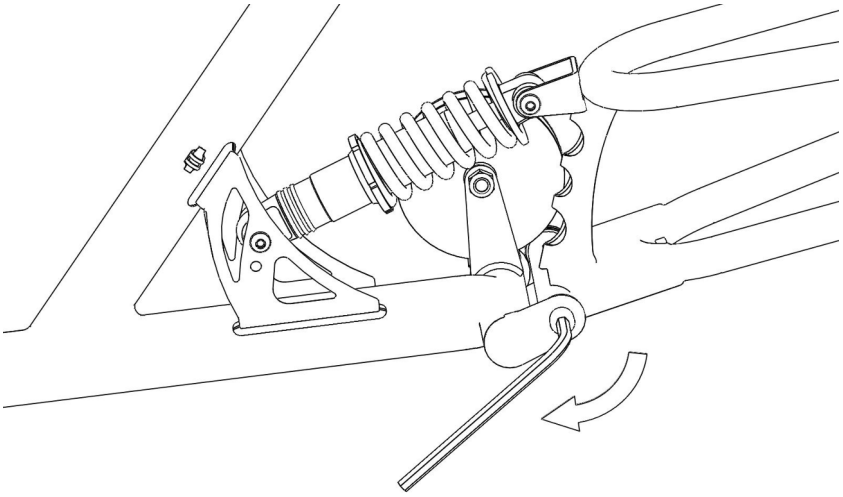

Front Wheels

Before you mount the wheels, install the tires and tubes, disc brake rotors and the calipers to the kingpin (where applicable). Inflate the tires to recommended pressure (tires have recommended rotation direction and minimal and maximal pressure values on the tire sidewall)

(For installation of brake components refer to the part manufacturers documentation)

Tip: The hub spacing is measured from the outside face of the lock nuts (or equivalent), this is commonly called the "O.L.D." (Over-Lock-nut Dimension)

The standard rear swingarms and wheels on the Stein trikes are all 135mm OLD. The Wild One 4x4 (FAT) comes with 190mm OLD and 12mm through axle.

The Front wheels on all Stein Trikes come with 12mm through axles. For different hub/brake types the length of these axles is different.

Standard front disc DH12N brake hubs: 12x110mm CroMo axles

70 and 90mm drum brake hubs: 12x120mm CroMo axles

FAT front disc DH12M brake hubs: 12x130mm CroMo axles

Before pushing the axle through the hub and kingpin, apply some non-adhesive lubricant to the axle. Do not install the axles if they have been degreased or dry.

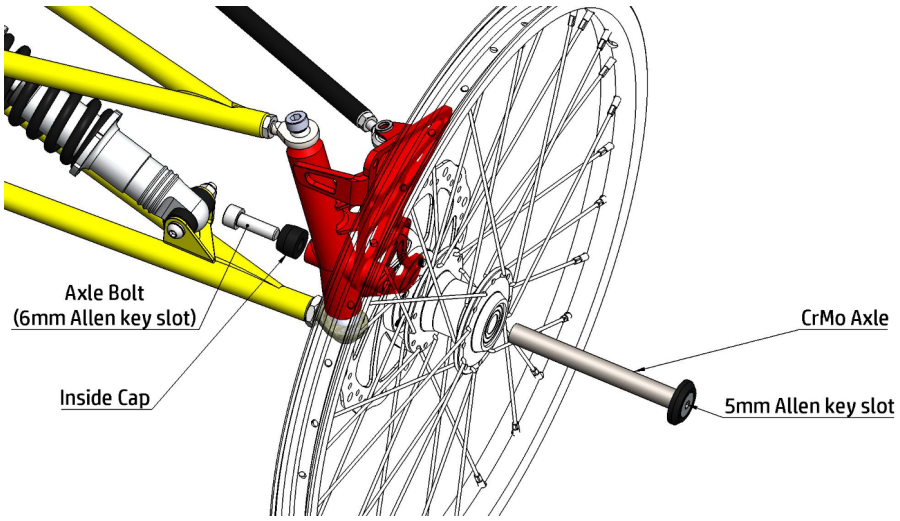

Do not use excessive force, the axle must slide through the hub without effort. See the image for proper positioning of the axle. Use the 5mm Allen Key on the outer end, and the 6mm Allen Key on the opposite side. Tighten to 18Nm.

4. Rear wheel

Once your front wheels have been fitted, take the rear wheel, with tire, cassette and optionally disc brake rotor fitted, lift the rear end of the trike and slide the wheel into the dropouts by lowering the rear end of the trike. Make sure the wheel's axle has properly seated, push the QR (if any) or place the washers and nuts (for IG hubs) and tighten the rear wheel.

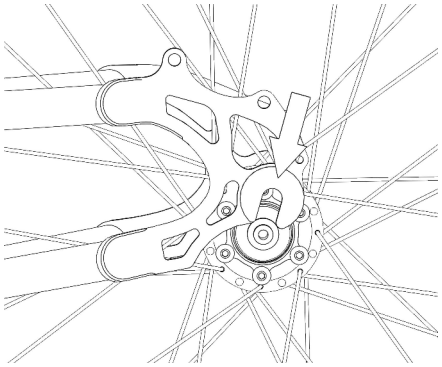

The Wild One 4x4 (FAT) rear wheel comes with a 12mm through axle by default. In specific cases, (installing the 190mm wide Rohloff or a different rear 190mm wide hub that is not designed to work with 12mm thru axles) traditional slotted dropouts should be installed.

Unlike the traditional, older slotted dropouts, the through axle system requires the axle to be removed from the hub before it can be fitted into the swingarm.

The rear swingarm has two slotted "C" shaped supports, one on each inner side of the rear swingarm.

The rear wheel has to slide into these supports (same procedure as with the standard wheels, described above - *wheel parts excluded from image for clarity*)

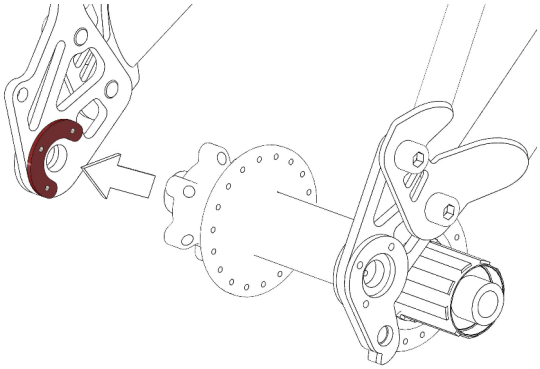

Make sure both sides are seated all the way before inserting the 12mm axle.

The axle has one threaded side and it has to be inserted from the non drive side, from left to the right.

NOTE: We use proprietary 12mm thru axles that are not compatible with Shimano or SRAM thru axles.

Before pushing the axle through the dropouts and hub, make a visual check to be sure the holes on the swingarm and hub are aligned. Do not use excessive force to avoid damage on the parts.

Once it has been pushed through, the nut can be mounted by hand, turning it clockwise.

Depending on type, use the QR lever or Allen Key to secure the axle.

5. Set up proper frame alignment – fit the seat (Modular only*)

If you went through step 3 of this manual, you already have the whole frame built up and set to proper alignment. If you didn't tighten the frame joint all the way, now it's time to do that.

Fit the seat starting at the front end, and tighten the provided bolt or QR at the front seat mount and slide the rear seat mount into position – the seat should fit perfectly down and the rear wheel should be straight. If the rear wheel looks like it's leaning to one side, check to make sure it's properly seated in the rear swingarm dropouts and if the back end is properly aligned.

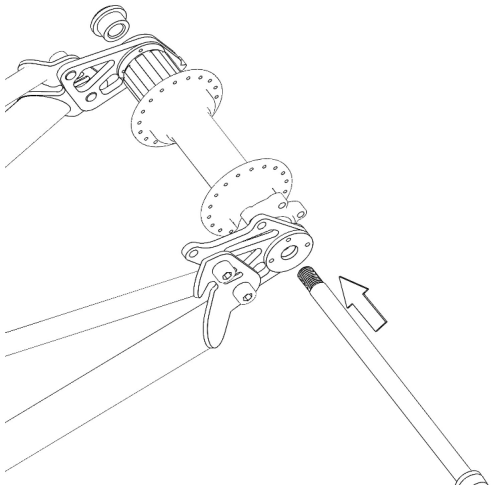

If the rear wheel is in place and the joint on the main frame is not tightened all the way, slowly rotate the back end until the rear wheel is vertical relative to the ground and the back end aligned with the rear seat mount blades. If the frame has been tightened, release the bolts on the joint and align the frame. When all looks well positioned, tighten the seat on both mounts and tighten the joint.

You can remove the seat for the time being.

Insert the handlebars

The handlebars come in pairs, the left and the right side. There are multiple sizes and these are usually matched to the rider's constitution. Regardless of the size, all the handlebars come with holes machined for use with Bar-End shifters and the shifter cable holes are always facing front. The upper holes are later covered with handlebar grips regardless of the shifter type used.

There are two holes for the shifter cables, one at the top (in) and one lower (out). If Trigger shifters are used and mounted to face up (shifter cable going up), a loop can be made to return through the grip cover and the cable can be guided out on the lower (out hole).

All the handlebars can be adjusted in width and angle depending on personal taste and preference. Some prefer their hands to be lower and the handlebars can be cut off at the top to be shorter, however, in that case the machined part at the top to accept standard bar end shifters will be lost and if you want to keep the bar end shifters the top of the tube must be reamed with a special reamer tool to 19mm or a new pair of shorter handlebars used.

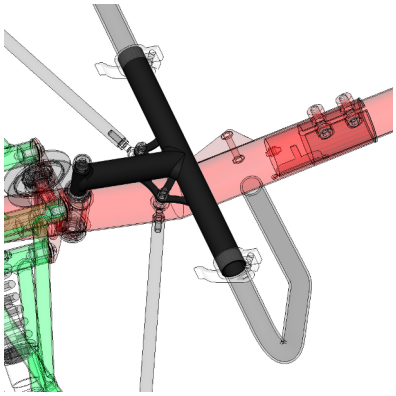

The centre steering part ("T" shaped) is slotted at both ends (L & R) and once the handlebars are set to width and angle, the clamp should be tightened to prevent the handlebars from sliding away from the set positions. Fine adjustment can be done anytime later and repeated if needed.

The standard clamps are 25.4mm/1" with quick release levers, but the QR lever can be replaced with a bolt if you don't intend to change the handlebar position often.

The minimal insertion of the handlebar into the centre part must be at least 40mm/1 ½" at the widest setting and combined adjustment allows for 150mm/6" adjustment (3" per side).

Just as with the back end and boom insertion, clean the handlebars with brake cleaner thoroughly before insertion.

Greasy and/or dirty joints may slip and it may be dangerous, resulting in loss of control and injury.

Insert the boom with BB mount

Inserting the boom (with Bottom Bracket and derailleur post) is a simpler task than joining the Modular frame parts (described in step 3 of this manual).
In most cases, the boom will slide into the frame easily – take all the precautions and cleaning/degreasing steps before installing, as described in step 3.
Do not tighten hard – that should be done after the correct position of the front end is set, and that primarily depends on the position of the cranks/pedals and is an individual setting for each rider.
The minimal insertion/overlap must be at least 70mm/2.75".

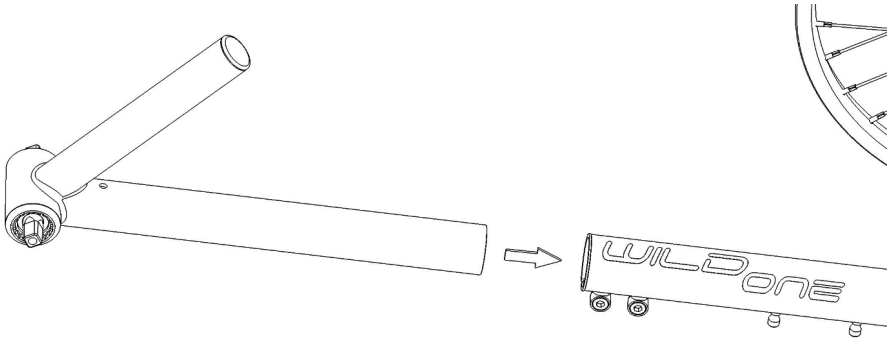

11. Mount the BB, the crank and the pedals.

Install per manufacturer's instructions.

12. Setting up the best BB/crank/pedal position for leg length

Now that the trike is assembled and on wheels, fit the seat and secure it. The front seat mount is fixed and the rear can be adjusted to get the most comfortable and natural seating position. For start, you can use the middle hole on the rear seat mount and change it later (up to +/-6°)
Use the provided bolts or QR and securely fasten the seat. Place the provided seat cover over it.

Do not lean or place your weight on the handlebar or the edge of the seat!

Instead, hold the front derailleur post with one hand and bend your knees until you feel the seat under your back. When you are seated, you can let go of the front derailleur post.

If the seat angle position is not comfortable enough, get up, (lean forward, grab the derailleur post and lift yourself) and re-adjust the seat angle.
When you are comfortable and seated, place your heel on the pedal. If your knee is bent too much, the BB is too close, if you need to stretch, it's too far.
Move the BB with the crank to a position where your leg is extended but still has some slack, so you can move your knee a bit.
When you are comfortable with the seating position, do a visual check if the front end is properly aligned. The crank axle and the pedals should be horizontal, the derailleur post vertical.
Tighten the bolts on the front end of the main frame to prevent the boom from twisting.

After a few initial rides, you might find that the seat recline angle you have set at first needs to be changed. Sometimes, the different seating angle requires the boom to be moved by a small amount to feel completely comfortable with the setup.

You can mount and adjust the front and rear derailleur, shifters, cables, set the limit screws as per manufacturer's recommendation.

Front Hub/Brake options

All Stein trikes models come with two front brakes and integrated mount for the rear parking brake. Our standard front wheels are built with disc brake hubs for 160mm 6-bolt mount rotors. The kingpins are designed according to IS2000 standard front brake caliper mounts.

The standard disc brake mount kingpins are designed for standard disc brake calipers. The left and right kingpin are different in appearance and not symmetrical/mirrored versions of each other.
Front hubs/brakes can only be used with the matching kingpin type. The kingpins are designed to be used with front adapters for the calipers and 160mm rotors, regardless if they are mechanical or hydraulic. The rear adapter can be for the front caliper if a 140mm rotor is used or rear (+20) if 160mm rotors are used.

FRONT HUBS



Front disc brake hub
for small wheels (16-18-20")



Front disc brake hub
for 20" off-road,
FAT and 24" front wheels

Bicycle components:

All our trikes are designed to use as many standard bicycle components as possible.

Rear Wheels/Hubs:

Depending on model, the rear wheels differ in size, hub type and spoke count. Our standard rear hubs are Shimano HG compatible and 8-9-10-11 speed MTB cassettes can be used.

IG Hubs:
Sturmey-Archer Tripleshift (CS-RK3) can also be combined with the above listed.
Rohloff and Enviolo hubs have a single speed sprocket.
Note: Enviolo Automatics needs a specific right hand side dropout that has no attachment for the traditional derailleur.

Brake System:

The brake system includes the brake levers, brake cables or hoses (hydraulic) disc brake calipers, rotors and mounting hardware. Rear brake is optional and by default mechanical including a caliper, cables and housing and a thumb friction lever.

Brake levers / Brake cables

For specific brake caliper type, use only compatible brake levers and cables.
Mechanical disc brake calipers should be used with disc – V brake levers.
Hydraulic disc brakes only with matching levers and hoses.
Although it's possible to mount the shifters upside down, we recommend installing the shifters (regardless of type) with the cable facing down instead of up.

Shifters, shifting cables

There are various types of shifters:
Grip shifter - a wheel with click stops surrounding the handlebar is turned until the desired gear is reached, though typically one gear at a time
Trigger shifter – usually has two levers that are actuated to change gears one at a time.
Thumb and Bar End shifter – a single lever is pushed or pulled to change gears one at a time - Bar End shifters are installed into the end of the handlebar (thus the name), Thumb shifters are mounted on the outside of the handlebar with a clamp.

While it is possible to mount the twist and thumb shifters upside down (cables going up), we recommend installing the shifters (regardless of type) with the cable facing down instead of up.

Derailleurs

Only use derailleurs that are compatible with the shifters and other drivetrain components. Set the B tension screw on the rear derailleur and the L-R limiter screws on both front and rear derailleurs.

How to use the B-tension adjustment screw

Mount the chain on the smallest chainring and the largest sprocket, and turn the crank arm to shift gears. Then turn the B-tension adjustment screw to adjust so that the guide pulley does not interfere with the sprocket but not so close that it touches the chain. Next, set the chain to the smallest sprocket and repeat the above to make sure that the pulley does not touch the sprocket.

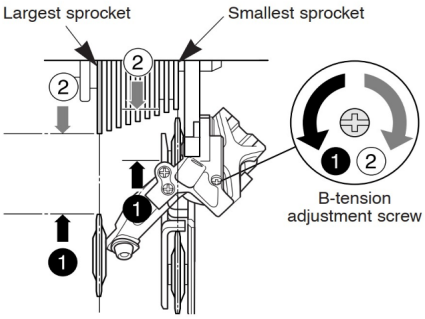

<Checking the distance between the largest sprocket and the guide pulley>

Set the rear derailleur to the lowest gear position, stop the wheel from turning, and then check that the distance from the edge of the guide pulley to the edge of the largest sprocket is within the range of 5 - 6 mm. Turn the crank arm to shift gears and check that there is no roughness in the feel. If the number of teeth for the cassette sprocket is changed, carry out this setting again.

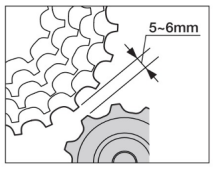

Bottom Bracket

All our Bottom Bracket shells are 68mm wide, with English thread (1.37in x 24TPI) where the Right Hand (Chain ring) side has a counter clockwise thread and the Left Hand side a clockwise thread.
Only above described Bottom Brackets with Threaded internal bearings can be installed.
For wider MTB hollow axle cranksets (73mm Bottom Bracket) with external cups, consult manufacturer's documentation and use spacers as required.

Press-fit BB can not be installed.

ON-E

The motor has a dedicated mount

Cassettes

Use only compatible cassettes, match the number of gears on the cassette with the shifter. Only matched components will work reliably. For compatibility charts, check manufacturer's documentation.

Tires / Tubes

Use the best type of tires for the intended use.

Chain Management/Routing the chain

Before installing the chain, make sure your gears are set to the smallest sprocket at the back and the smallest chainring at the front.
Depending on model, drivetrain components and rider height, the trike will require approximately 3 joined chains. Use quick links for this.

Avoid joining the chain with the chain pin removal tool. Use it only for shortening the chain!

Modern Narrow and Super Narrow bicycle chains have specially formed outer links which get damaged when the pin is pushed out. Such links are not reliable and will eventually fail in use. Some chains come with Quick links or as some call them "missing link". Use only those that either come with the chain or dedicated type for the chain you will use.

The image below shows the proper chain routing. The arrows show the direction in which the chain should be pulled through during the assembly process.

The power side of the chain (top portion) must go under the pulleys.

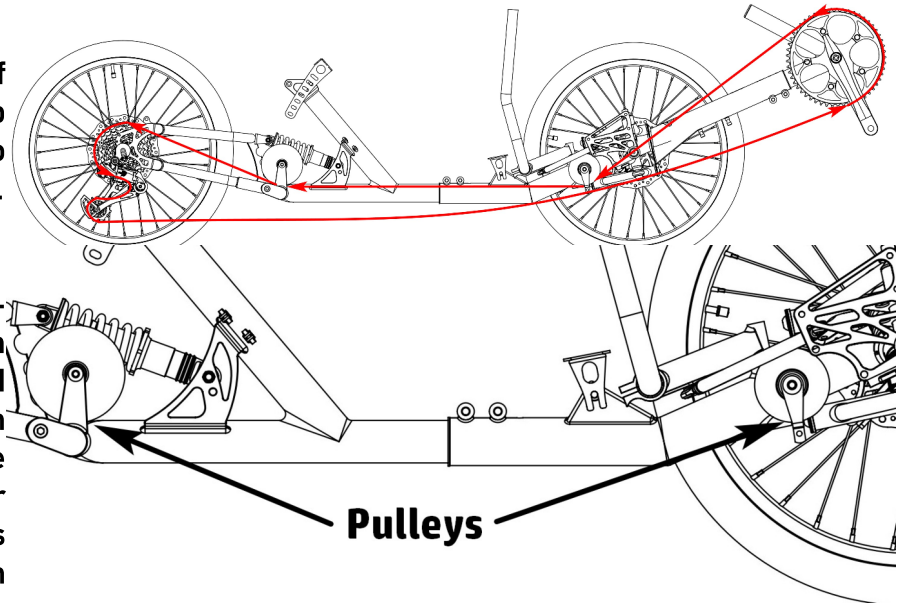

The return portion of the chain must be pulled through the chain tube. It can be done before or after the chain is routed through the rear derailleur.
The chain tube has both ends flared to allow the chain to move easily.

If you want to shorten the chain tube, take care to flare the end after cutting off the excess tube portion.

Method 1:
Start in front, with the front pulley, routing the chain toward the rear pulley, under it, above the frame (swingarm support), over the smallest sprocket on the cassette, and through the front derailleur. Pull the chain out from the lower pulley enough to reach the ground. Go back to the front and pull the chain through the front derailleur, over the smallest front chainring and start pushing it through the chain tube until it appears on the back end of the chain tube.

Method 2:
Start from the back end, push the chain all the way through the chain tube, pull over the crank, through the front derailleur, under the front pulley (through the groove, above the chain guard), under the rear pulley, over the cassette, through the rear derailleur until it reaches the ground (table or the surface you're working on)

The exact chain length can be only determined once the position of the boom is set for the rider with the cassette and crankset installed. (see diagram below)

Two sprockets, chain length method

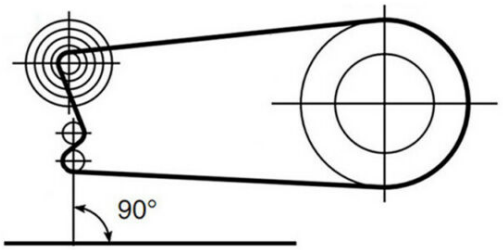

Two guide wheel vertical 90 degrees

Three sprockets, chain length method

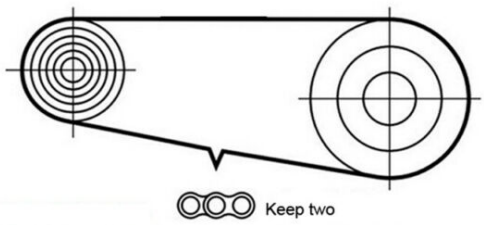

Setting up the handlebar optimal position (width and angle adjustment)

Now that your trike is built up for your needs, all the drivetrain components installed and set up, the last thing remaining is setting the most comfortable position of the handlebars and recline angle of the seat.
The image below shows the possible adjustments on the trike.
Once it's all in the most comfortable position, tighten all the joints and connections to prevent twisting or movement during use.

Tracking (Toe-In check / Setting proper Toe-In)

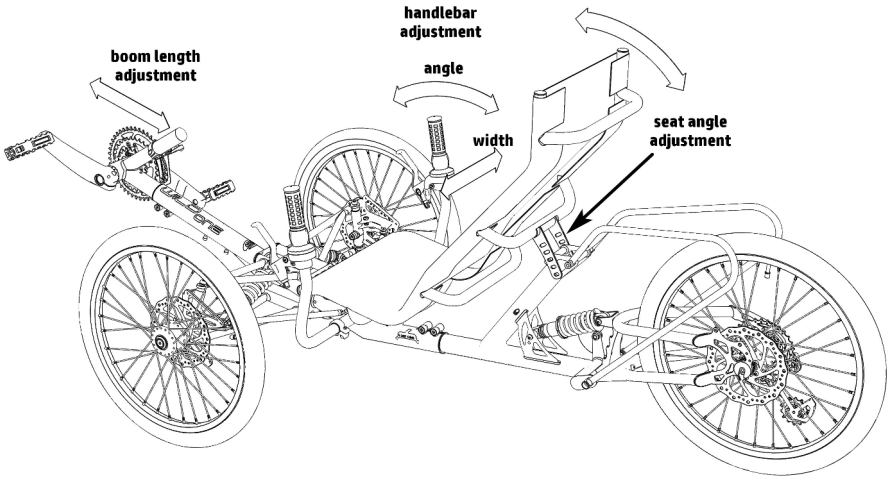

The camber and toe in are factory set with every trike we build and ship. This is a procedure that requires time, precision and patience. If your trike came pre-assembled or if you built it from a frame kit, you don't need to go through the procedure. However, if for some reason you take the front end apart for any reason, after assembly you will have to check if the camber and toe in are set up properly and if not, adjust accordingly. If not sure how to set it up properly, let your dealer do that for you or follow the steps in our video:
https://youtu.be/l4rGxr_6yno

Test Ride

If you followed all the steps in the assembly manual, your trike is ready for use. For your first ride, pick a safe place, without traffic or obstacles (an empty street without traffic or an empty parking lot).

Regardless of the fact that everything has been properly set up, the gear shifting or the braking system might need additional adjustment – not being capable to stop in time can lead to an accident.

You might find that your seat angle or handlebars, brake levers or shifter need to be moved into a slightly different position and the test ride is the best way to find out if everything is set up to your liking.
Give yourself some time to get used to the position of the brake levers and shifters and the new position of your body.
When riding, to not use a tight grip on the handlebars and try not to move your whole body while pedalling – that will induce weering your trike sideways. Use only your legs with your chest and shoulders being relaxed.

If you hear rubbing, creaking or other unusual sounds, re-check all the connections and bolts for loose spots.

If the shifting is not smooth, check the drivetrain components and shifting cables and re-adjust. Sometimes the quick links can get stuck, and can cause noise, miss shifting or gears skipping. Check the chain.

If you feel that the seat is leaning, stop as soon as possible, lock the front brakes (or the rear parking brake if installed), dismount and check if the rear wheel is properly aligned – if the back end is tilted you didn't tighten the frame joint and the seat sufficiently.
Repeat the procedure described in step 7, page 23 of this manual (Modular frame assembly).

If the front suspension springs are not pre-loaded sufficiently, the front end might feel soft and spongy, also causing tilting sensation while cornering – especially pronounced with models which have bigger rear wheels.
Tighten the suspension shocks by turning each spring and the preload ring clockwise until you feel resistance.
Insufficient tire pressure can also cause similar behavior. Pump up the tires to recommended pressure.

Always use the handlebars to control the steering and always have at least one hand on the handlebars.

The steering and suspension on all Stein trikes has been perfected to achieve reliable, predictive and easy steering, even at high speed descents. If you have set up your front end properly, the steering should always try to self align to go straight ahead. However, on crowned roads it may tend to weer off toward the sloping edge of the road. Also, on a trike, you have three tracks and three times better chance to hit a pebble, bump or a hole with one of the wheels. It is very important that you pay attention to the surroundings, traffic and others all the time. Sometimes you simply can't avoid hitting an obstacle. If that happens, the front wheel that hits the obstacle or a hole will try to compensate either with the suspension element absorbing the obstacle or by trying to get around it that can cause the steering to pull sideways. If your hands are holding the handlebars, you can control the direction and the amount of how much the front wheel is turning away. That way, you will always be able to control what is happening and avoid flipping the wheel

sideways which could cause sudden stop, possible failure of the front wheel and flipping the trike and getting injured. That is highly unlikely scenario at lower speeds and very possible at very high speeds.

Always ride at adequate speed (depending on terrain) so you can always react in time and avoid damaging your trike or injury.

The lowest point of your trike is right underneath the seat. Always try to avoid obstacles that may hit the frame or the wheels.

Maintenance

The frame includes the main frame with suspension and steering mechanism, boom and back end. It is essential to the integrity of your trike.
Regular checks and maintenance are important to keep it reliable and usable for many years to come.

Inspect the frame for damage before each ride.

Scratches, cracks, dents or deformation are signs of damage. If any part of the frame shows signs of damage, do not ride your trike. Ask your dealer for advice on whether to replace the damaged parts.
The frame needs no special maintenance, other than keeping it clean.
The recommendation is to clean it after every use.

All the Stein trikes tricycle frames are made from high quality corrosion resistant steel and are protected with a thin layer of protective wax from inside.

Important!: The steel frames are NOT rustproof and will eventually corrode if you don't take proper care.
If the trike has been subjected to excessive moist, rain, snow or mud, some of it might protrude into the internal section of the frame.
Accumulated dirt on movable parts can also cause premature wear (acting as as a sanding paper) and is also *hygroscopic* (tending to absorb moisture from the air, thus causing corrosion) Keeping your trike clean is the best thing you can do for it.

Do not use high pressure washers to clean your trike! That will remove the special lubricant in the suspension system and will cause premature wear of the moving parts and damage.

TIP: The simplest way to get rid of unwanted water from the inside of the frame is to lock the front brakes, remove the boom and lift the rear wheel until the front end of the trike is facing down. You can place something under the rear wheel until the water drains out. Use a brake cleaner to get rid of any trace of dirt from both inside the frame, plastic sleeve and boom. Reinstall the boom. Remove the masking tape.

TIP: Before removing the boom, use self adhesive (masking) tape around the boom right next to the plastic sleeve as a mark where the boom should be returned to avoid any need for adjustment.

Regular and periodical checklist:

After every use:

- Clean your trike
- Make a visual check for damages on the frame and bike parts

Before every use check the following :

- Any loose nuts or bolts
- Inspect the brake system for function
- Steering system for functionality or any play

- Wheels if they spin freely and if they are securely tightened
- Tire pressure
- Chain for stiff links
- Gear shifters and derailleurs for proper functioning
- BB axle, crankset and pedals for any play
- Mirrors, lights and flag (replace or charge batteries if needed)

Once a week in the first month of use:

- Inspect nuts on the front swing arms (13 and 17mm wrench – tighten by turning clockwise)
- Inspect bolts on top and under the kingpins (6mm Allen key – tighten by turning clockwise)
- Check and tighten front wheel axles if needed
- Check the seat mounts and frame joint
- Look for loose spokes in the wheels

Every next month at least once repeat the steps listed above for the first month of use.

After the first six months and every next six months after that, check brake cables, brake pads and drivetrain components and tires for wear, replace if needed.

WARRANTY

Steintrikes d.o.o. warrants, to the original owner of each new Steintrikes tricycle that the main frame, seat frame, and steering components are free of defective materials or workmanship for one (1) year from the date of purchase or ten (10) years from original date of purchase but only if the frame has been registered with Steintrikes within 30 days of purchase.

Warranty terms and conditions are available on our official website: www.steintrikes.com